□□□□□□ □□□□□□□□:

1.3 □□□□□□ □□ □ □□□□□□□□ ABS □□□□□□□□□□ □□ □□□□ □□□□□□ □□□□□ □□□□□ □□□ □□□□□ □□□□□□□ □□□□□□

□□□□□□□ □□□□□ □□□□.

2 □□□.THE □□□□□ □□□□□ □□ □□□□□□ □□□□ □□□□□□□ □□□□ □□□□ □□□□□□ □□□□□□ □□□

3.Suitable □□□□□□□ □□□□□□ □□□□□ □□□□ 6 ~ 4.7 □□□□□□.

4 □□□.Secret□ □□□□ □□□□□□□□ □□□ □□ □□□ □□ □□□ □□ □□□□ □□ □□□□□ □□□□□

5.can 3 □□□□ □□□ □□□□ □□□□□□D □□□□□□□□ □□□□□□□ □□□□□□ □□□□□□□ □□□□ □□□□□□□□ □□□□□□

6.3 □□□□□□D □□□□ □□□□ □□□□□ □□□□□ □□□□□□ □□□□□ □□

“ Maybe ”

You always don't know

Starting today, your troubles will be BOX mirror to change everything, so that life becomes arbitrary

Product Features

Three
visual
shock
TOP.2
Immersive 3D games
Play games, super immersive 3D action / shooter /
RPG roaming, playing all kinds of games

Product Process

Must Warlords

Internal and external

We resolutely resist junk, Quality Cengcengbaguan,Each of the parts are accurate to the standard,try to do better.

43
Group
Precision Accessories

59
Path
Assembling process

Comfortable goggles

- **Simple luxury comfortable fit**

Depending on the facial structure design, natural fit and comfort

- **High-grade leather clean without leaving bacteria**

  Ear pads with a comfortable foam and soft leather outsourcing, will not put pressure on the ear, giving you a comfortable wearing experience

Material upgrades

You will not feel visual fatigue and dizzy even you use long time w/ the resin lens

Secret images, other people can not see anything except to the wearer himself

Our lens is **not the same**

Precision technology, eye protection

The 3D Glasses is made of ABS and spherical resin lens materials without stimulation plastic sheet that is environmentally friendly, fully enclosed designed

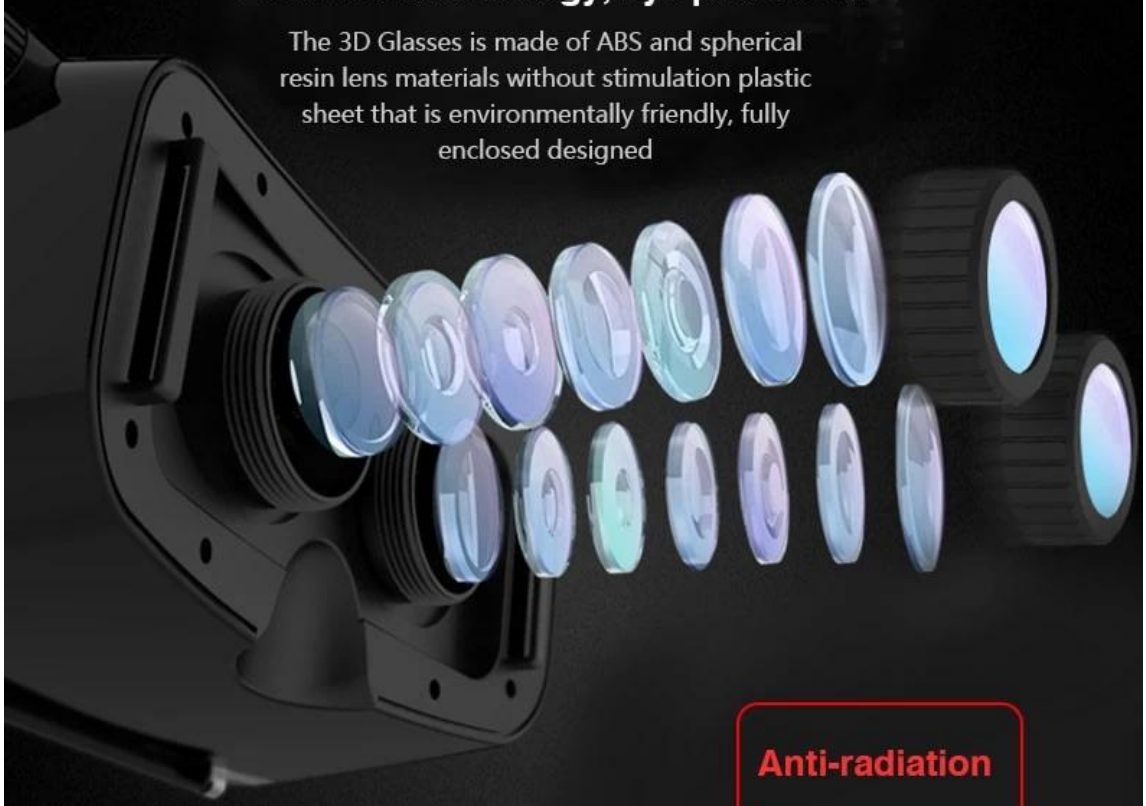

Anti-radiation

Visual experience

3D picture of the screen effect is super good, awesome feeling.Convenient to use: can watch at anytime anywhere whether sitting, lying or standing

product details

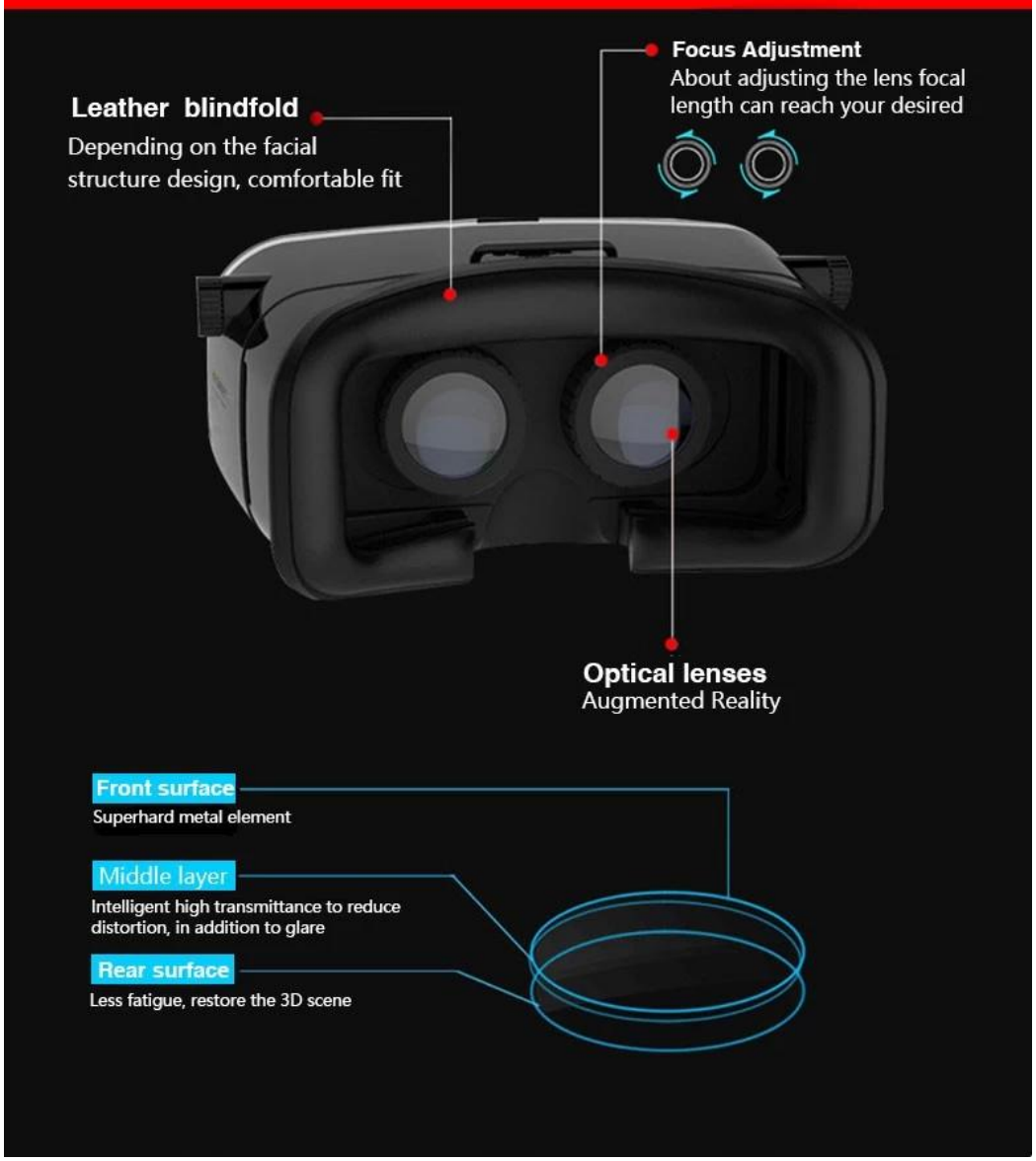

Focus Adjustment
The adjustment range of up to 22mm for 99% of the population
Object distance adjustment
Myopia users of the Gospel
VR BOX
Brandnew visual
Adsorption front cover
Removable front cover, effectively solve the problem of mobile phone sultry heat and wear
Object distance adjustment

Adsorption panel
intimate Cooler
VR BOX
Brandnew visual

Easy
adjustment of IPD

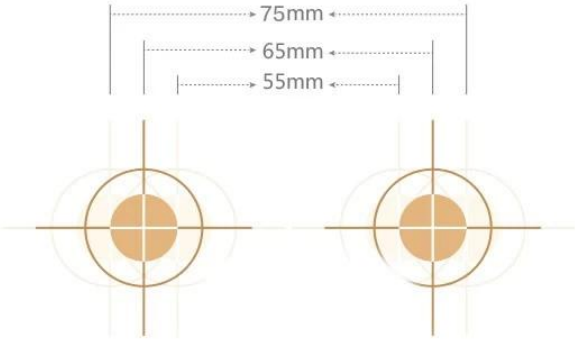

Better adaptation of the mobile phone

Want to see as you operate

Method of operation

1. Download podcasts and video playback test

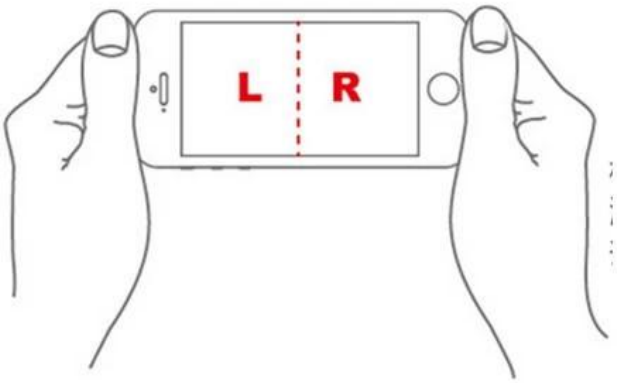

Select Install menu with 3D video players and games, to test whether the video about split screen (left), and full-screen playback

2.Equipment

Gently open the top of the adsorption switch (see right)

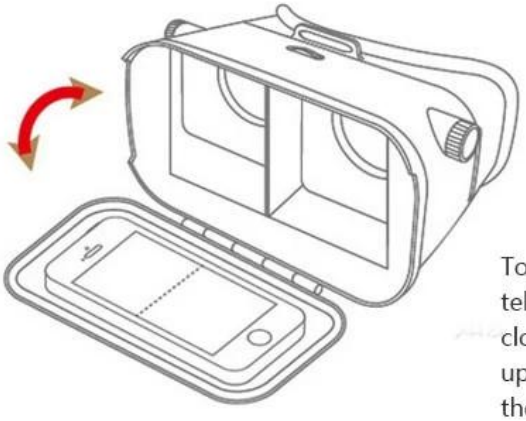

Towards the phone screen, gently struck telescopic adjustment slot, put your phone, close the cover plate (left), found the picture upside down, you can adjust the direction of the phone.

3.Somatosensory control

Screen options: a mobile phone into a device, you can swing left and right selection screen (see below) in the screen list

VR Games: 3D games can also play left and right somatosensory control (see below)

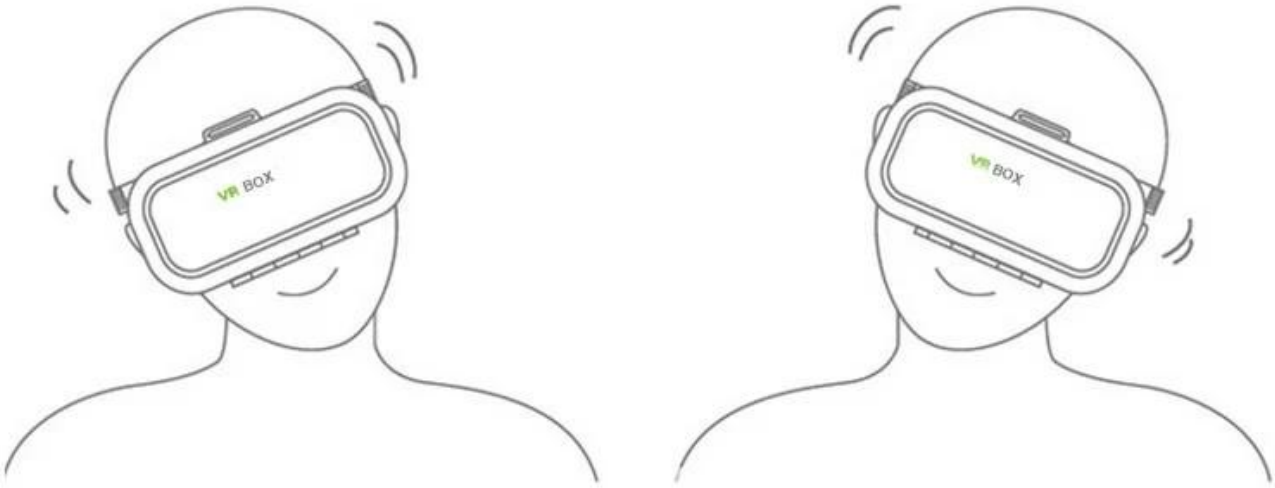

Thanks for reading